Geometric Representations of Classical and Quantum Spin Systems

(Leitmotif: a loop-cover dichotomy and it manifestations in some classical and quantum spin models)

Michael Aizenman

Princeton University

"Quantissima in the Serenissima IV"
August 23, 2022

Sometimes a common mathematical structure is found underlying a number of different physics phenomena. Examples: KPZ "universality class", the SLE processes,...

While not in that league in terms of explicit formulae, the main subject of this talk is another such example.

In this case a common loop-based mathematical structure, and a related dichotomy, are found to play a role for a number of interesting and at first sight very different physics phenomena. These include:

- the discontinuity in the phase transition of planar Q state Potts models with $Q > 4$.
- symmetry breaking in the ground states of two different extension of Heisenberg's quantum anti-ferromagnetic spin chain:
  - dimerization under H_{AF} for $S > 1/2$,
  - Néel long range order under the asymmetric H_{XXZ} ($\Delta > 1$).
- the Berezinskii-Kosterlitz-Thouless phase of slow decay of correlations in $O(2)$ symmetric spin models.
- pinning versus delocalization in a class of height functions formulated over $\mathbb{R}^2$

- $\mathcal{L}$ - a periodic array of lines in $\mathbb{R}^2$
- Ω - the set of (oriented) loop covers of $\mathcal{L}$, equipped with the natural Borel structure
- $(\Omega, \mu(d\omega))$ - a probability measure on Ω which is periodic under shifts
- Of particular interest is the function $\boxed{g(u,v) := \Pr(u \overset{\omega}{\longleftrightarrow} v)}$ for $u, v \in \cup_{\ell \in \mathcal{L}} \ell$
  (the probability that u and v are on the same loop of ω)

Two examples: 1) For percolation, and more generally the Q state Potts models (graph drawn on the board)

$\mathcal{L}$ = the union of the edges of the line graph $L(\mathbb{Z}^2)$ $\boxed{Z_L = \int_\Omega \sqrt{Q}^{N_1(\omega)} e^{(\beta-\beta_c)(N_0(\omega)-N_0^*(\omega)} \mu(d\omega)}$

2) For quantum spin chains, with $\boxed{H = -\sum_u K_{u,u+1}}$ $\boxed{Z = \operatorname{tr} e^{-\beta H} = \sum_\alpha \langle \alpha | e^{-\beta H} | \alpha \rangle}$

$\mathcal{L}_{L,\beta} = \mathbb{Z} \cap [-L, L] \times [0, \beta]$

$$\boxed{e^{-\beta H} \approx \int_\Omega \prod_j^* K_{(b_j,t_j)} \mu(d\omega)}$$

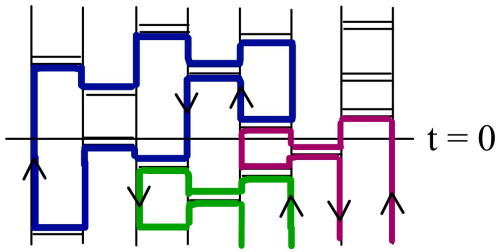

$$\boxed{H_{AF}^{(L)} = -\sum_{u=-L+1}^{L-1} (2S+1) P_{u,u+1}^{(0)}}$$

An emergent similarity:

$$(2S+1) \longleftrightarrow \sqrt{Q}$$

Feynman, Dyson, Ginibre '71, "Suzuki-Trotter", .., Aiz.-Lieb '90, Conlon-Solovej '91, Toth '93, Aiz.- Nacht. '94.,... Aiz., Duminil-Copin Warzel '20, ... Björnberg, Mühlbacher, Nachtergaele, Ueltschi '21

Warmup: $\boxed{e^{\beta(H-1)} = \sum_n p_n H^n \equiv \mathbb{E}(H^N)}$ with $p_n = \frac{\beta^n}{n!} e^{-\beta}$ (the Poisson distribution)

$$e^{\beta \sum_{b\in\mathcal{E}(\Lambda)}(K_b - 1)} = \int_{\Omega(\Lambda,\beta)} \mathcal{T}\left(\prod_{(b,t)\in\omega} K(b,t)\right) \rho(d\omega)$$

$\Omega(\Lambda,\beta)$ – the set of countable subsets of $\mathcal{E}(\Lambda)\times[0,\beta]$
$\rho(d\omega)$ – the probability measure under which ω forms a Poisson process over Ω, of intensity dt along each "vertical" line $\{b\}\times[0,\beta]$.

One gets:

$$\operatorname{tr} e^{-\beta H/2} F e^{-\beta H/2} = \int_{\Omega(\Lambda,\beta)} \rho(d\omega) \operatorname{tr} \mathcal{T}$$

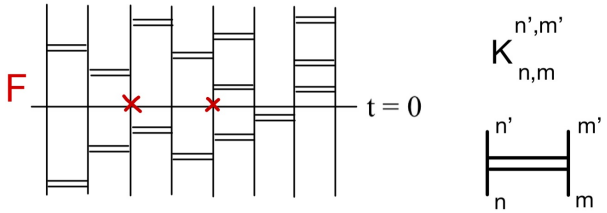

Thermal expectation value functional for a quantum spin model are expressed in terms of an integral over histories of $\{S_x^z\}$ (in "imaginary time"), i.e. configurations of $\sigma^3(x,t)$ defined over $[-L_1, L_2], \times[0,\beta]$.

Each quantum operator F, on the Hilbert space associated with Λ, is represented by a specific action on this functional integral (typically at $t=0$).

To demonstrate the general principle we next spell this for $\boxed{H_{AF} = -\sum(2S+1)P^{(0)}_{u,u+1}}$.

In the basis of e.funct's of $\{S^z_u\}$:

$$\boxed{(2S+1)P^{(0)}_{u,v} = \sum_{m,m'=-S}^{S} (-1)^{m-m'} |m,-m\rangle\langle m',-m'|}.$$

In this case, the signs can be changed to all positive by the gauge transformation $U = e^{i\pi\eta/2}$ at $\eta = \sum_u (-1)^u S^z_u$.

By these means, one gets a stochastic geometric representation of the thermal states in terms of a system of random loops (AN94):

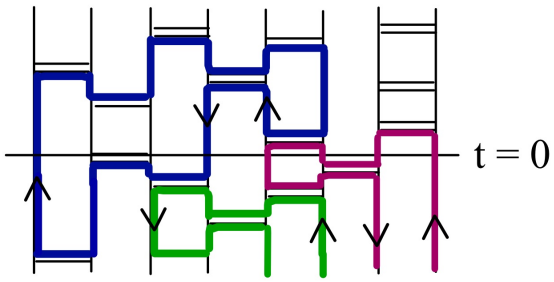

$$\mathrm{tr}\ \mathcal{T}\left(\prod_{(b,t)\in\omega} K(b,t)\right) = (2S+1)^{N_1(\omega)}$$

with $S^z(u,t)$ restricted to $\pm m$ at $m \in [-S, S]$ constant, and $\pm$ flipping upon each "time reversal", as one travels along a loop. (Note the similarity with Q state Potts on p.4 !)

$$\langle F\rangle_{\Lambda,\beta} = \int_{\Omega(\Lambda,\beta)} \mathbb{E}\,(F\,|\omega)\ (2S+1)^{N_1(\omega)}\rho(d\omega)/\mathrm{Norm}$$

and $$\mathbb{E}\,(F\,|\omega) := \mathrm{tr}\, UFU^*\,\mathcal{T}\left(\prod_{(b,t)\in\omega} K(b,t)\right)/(2S+1)^{N_1(\omega)}.$$

Theorem 1 (AN'94) In the infinite-volume limit, each loop-soup measure, with a local finite-energy condition, exhibits
either slow decay of correlations (connectivity) or else long range order.

More explicitly: either

$$\boxed{\sum_{u\in\mathbb{L}_1} |x|\,\tau(0,x) = \infty}$$

or else there exists a bounded measurable function $m(\omega)$ with

$$\boxed{\mathbb{E}(T_x\omega)) = (-1)^x}.$$

Proof idea: move to the board.

Theorem 2 In the following models (the first classical the other two quantum)

$$\begin{cases} \text{the classical } Q \text{ state Potts model at } \beta_c \\ \text{for the ground states of } H_{AF} \\ \text{for the ground states of } H_{XXZ} \text{ at } S=\frac{1}{2} \end{cases} \qquad \text{LRO (option 2) holds exactly for} \begin{cases} Q>4 \\ S>1/2 \\ \Delta>1 \end{cases}$$

$H_{\text{Potts}} = \sum_u \delta_{\sigma_u,\sigma_{u+1}}$ option (2) $\Leftrightarrow$ discontinuity in the spontaneous magnetization

$$H_{AF} = -\sum_{u=-L+1}^{L-1} P^{(0)}_{u,u+1}$$ option (2) $\Leftrightarrow$ dimerization

$$H^{S=1/2}_{XXZ} = \sum_{u=-L+1}^{L-1} \left[\underline{\sigma}_u\cdot\underline{\sigma}_{u+1} + (\Delta-1)\sigma^z_u\sigma^z_{u+1}\right]$$; option (2) $\Leftrightarrow$ Ne'el order (staggered magnetization)

What makes $Q = 4$ into a threshold value?

Two tracks to the answer:

I) An old hint (Baxter–Kelland–Wu '78):

Writing $\boxed{\sqrt{Q} \;=\; e^{\lambda} + e^{-\lambda}}$ $\left[\text{ or correspondingly } (2S+1) \;=\; e^{\lambda} + e^{-\lambda}\right]$
BKW noted that the solution for λ changes its nature at $Q = 4$ (λ is real, and $\neq 0$, for $Q > 4$).

(**the relevance of this observation to be explained on the board.**)

An alternative track (which requires harder analysis, but yields more information):

II) Bethe ansatz analysis of the 6-vertex models, which is robust enough to handle also the model's 1–directional continuum limit.

The rigorous support for II was provided by DC, Gagnebin, Harel, Manolescu, and Tassion '16.

The challenge to develop an argument based on (I) was finally met in
G. Ray, Y. Spinka *A short proof of the discontinuity of phase transition in the planar random-cluster model with $q > 4$*, (CMP 2020)

In a joint work with Hugo Duminil-Copin and Simone Warzel this approach was extended to also cover the quantum models with H_{AF}, and H_{XXZ}.
M. Aizenman, H. Duminil-Copin, S. Warzel, *Dimerization and Néel Order in Different Quantum Spin Chains Through a Shared Loop Representation*, Ann. H. Poincaré **21**, 2737 (2020).

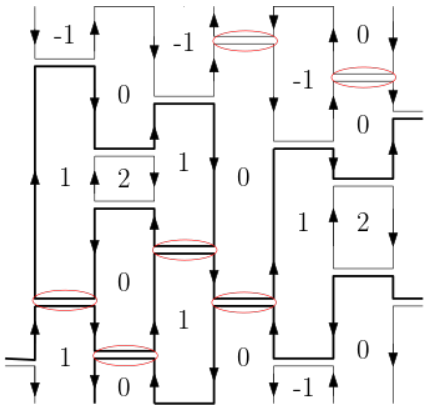

The height function associated with a specified configuration of rungs and loop orientations, and the related binary pseudo spin (defined by the arrows).

Note: vertical discontinuity in the pseudo spin τ implies the presence of a rang of ω.
However, ω also includes other rungs (marked in small ovals) whose presence is transparent to τ. Their knowledge is essential for the full reconstruction of the loops of ω, but not for the height function.

This yields two distinct perspectives on ω: Overall, the hight function's distribution is an even function of λ. However conditioned on the location of all the rungs, it is not(!) and it exhibits helicity!

The combination of these two properties allows to rule out delocalization for the height function at $Q > 4$, and by implications to prove symmetry breaking / LRO at the corresponding values of Q / S / Δ.

The argument (ADW '20) is an adaptation to these systems of an approach which first appeared in

G. Ray, Y. Spinka *A short proof of the discontinuity of phase transition in the planar random-cluster model with $q > 4$*, (CMP 2020).

Recently, the loop-soup dichotomy was shown to yield also an alternative explanation of the slow decay of correlations in two dimensional O(2) symmetric spin models, i.e. existence of the BKT phase (AHPS'21).

• I. Affleck, *Exact results on the dimerisation transition in $SU(n)$ antiferromagnetic chains*, J. Phys.: Cond. Matt. '90.
• M.N. Barber and M.T. Batchelor, *Spectrum of the biquadratic spin-1 antiferromagnetic chain*, Phys. Rev. B. '89.
• A. Klümper, *The spectra of q-state vertex models and related antiferromagnetic quantum spin chains*, J. Phys. A: Math. Gen. '90.
• M. Aizenman and B. Nachtergaele, *Geometric aspects of quantum spin states*, Com. Math. Phys. '94.

• M. Aizenman and E. Lieb, *Magnetic properties of some itinerant electron systems at $T > 0$*, Phys. Rev. Lett. '90
• B. Nachtergaele and D. Ueltschi, *A direct proof of dimerization in a family of $SU(n)$-invariant quantum spin chains*, LMP '17.
• S. Bachmann, B. Nachtergaele *On gapped phases with a continuous symmetry and boundary operators*, JSP '14.
• J.E. Björnberg and D. Ueltschi, *Decay of transverse correlations in quantum Heisenberg models*, J. Math. Phys. '15

• C-N Yang and C-P Yang, *One-dimensional chain of anisotropic spin spin interactions. I. Proof of Bethe's hypothesis for ground state in a finite system*, Phys. Rev. '66
• R.J. Baxter, *Potts model at the critical temperature*, J. Phys. C. '73
• H. Duminil-Copin, M.H. Gagnebin, M. Harel, I. Manolescu, V. Tassion, *Discontinuity of the phase transition for the planar random-cluster and Potts models with $q > 4$*. (arXiv '16)

• A. Glazman, R. Peled, *On the transition between the disordered and antiferroelectric phases of the 6-vertex model*, (preprint).
• G. Ray, Y. Spinka *A short proof of the discontinuity of phase transition in the planar random-cluster model with $q > 4$*, (arXiv '19).

• M. Aizenman, H. Duminil-Copin, S. Warzel, *Dimerization and Néel Order in Different Quantum Spin Chains Through a Shared Loop Representation*, Ann. H. Poincaré **21**, 2737 (2020).

• M. Aizenman, M. Harel, R. Peled, J. Shapiro, *Depinning in integer-restricted Gaussian Fields and BKT phases of two-component spin models (arXiv '21).*

• M. Lis and D. van Engelenburg: *A new approach to the Berezinskii-Kosterlitz-Thouless transition in the planar XY model* (arXiv '21).

Thank you for your attention.

And thank you Daniel for instigating and organizing this very satisfying series of workshops!